Thank you for choosing a NIVELCO instrument.
We are sure that you will be satisfied throughout its use!

NIVOCONT
KRK-512 CONDUCTIVE LEVEL SWITCH

USER'S MANUAL

Manufacturer:
NIVELCO Process Control Co.
1043 Budapest, Dugonics u. 11.
Phone: (36-1) 889-0100 Fax: (36-1) 889-0200
e-mail: marketing@nivelco.com http://nivelco.com

1. APPLICATION

The conductive measuring principle can be applied to liquids with specific conductivity over 10 μS/cm. The switching unit can sense the resistance between probes. Conductivity measurement is suitable only for detecting the presence of liquid at a given level of the tank. This level is represented by the length of the probe.

The level switch consists of a **NIVOCONT KRK-512-□** type switching unit and the **KLN-2□□** type probes selected according to the task. Probes are to be connected to the **NIVOCONT KS□-20** type probe socket head that can be screwed into the tank. If the material of the tank or its internal insulation is not conductive then a reference probe should be used in addition to the one, two, three or four probe(s), if the material of the tank is conductive, the tank can be used as a reference probe.

The conductive switch is suitable for filling / emptying control or level limit.

2. TECHNICAL DATA

2.1 General data

2.1.1 Technical data of the switching unit

Type	KRK-512-□	
Probe voltage	5 V AC	
Probe current	< 0.5 mA AC	
Sensitivity	Adjustable: 5 kΩ ... 100 kΩ	
Max. cable capacity	3 nF	
Response	max. 400 ms	
Setting accuracy (mech.)	± 5 %	
Delay	Adjustable: 0.5 ... 10 s	
Relay output	1x SPDT	
Switching voltage	250 V AC1, 24 V DC	
Switching current	16 A AC1	
Switching power	4000 VA AC1, 384 W DC	
Electrical strength	4 kV	
Mechanical life-span	3 x10^7 switches	
Electrical life-span	0.7x10^5 switches	
Power supply U_n	110 V, 230 V AC	24 V AC/DC
Voltage range allowed	nominal voltage – 15% ... +10%	
Power consumption	max. 2.5 VA / W	
Ambient temperature	-20 °C ... +55 °C	
Electrical connection	max. 2.5 mm² / with insulation 1.5 mm²	
Electrical protection	class II	class III
Ingress protection	IP 20	
Mechanical connection	DIN EN 60715 rail	
Mass	76 g	

2.1.2 Technical data of probe sockets

Type	KSK-201	KSP-201	KSS-201	KSN-201	KSH-202	KSH-203	KSH-204	KLN-2□□
Nr. of probes	1				2 probes + 1 ref. probe	3 probes + 1 ref. probe	4 probes + 1 ref. probe	1
Insulation of socket	ABS	PP	PFA					—
Cable gland	Pg 9	M4 nut rubber cap protected			M20x1.5 cable diameter 6 ... 12 mm			—
Process connection	—	3/8" BSP			1½" BSP			M6
Socket material	—	PP	A44 steel	KO35 stainless steel (1.4571)				
Housing material	—				Paint coated aluminium cast			—
Medium temperature	max 80°C		max 200 °C					—
Max. pressure	—	0.3 MPa	1.6 MPa					—
Ingress protection	—	IP 20			IP 65			—
Mass	0.05 kg	0.1 kg			0.4 kg			0.22 kg/m

2.2 Order codes

NIVOCONT K R K - 5 1 2 - □

Power supply	Code
230 V AC	1
110 V AC	2
24 V AC/DC	4

NIVOCONT K S □ - 2 0 □

Type	Code
Cable probe	K
Single probe, PP socket	P
Single probe, steel socket	S
Single probe, st. steel socket	N
Multiple probes, st. steel socket	H

Probes	Code
1 no	1
2 nos + reference probe	2
3 nos + reference probe	3
4 nos + reference probe	4

NIVOCONT K L N - 2 □ □

Probe length*	Code
0.5m … 3m	05…30

* to be ordered in 0.5 m units

NIVOCONT K L P - 2 0 4 Separator

2.3 Accessories

- User's manual
- Certificate of warranty
- Declaration of conformity
- Sealing (2 mm thick) (KLINGER OILIT):
  - 1 pc. 3/8" *(for KSP-201, KSS -201, KSN-201)*
  - 1 pc. 1½" for a *KSH-20_*
- M6 nut (standard SW):
  - 3 pcs. for *KSH-202*
  - 4 pcs. for *KSH-203, KSH-204*
- M6 nut (non-st. SW):
  - 1pc. for *KSH-204*

2.4 Dimensions

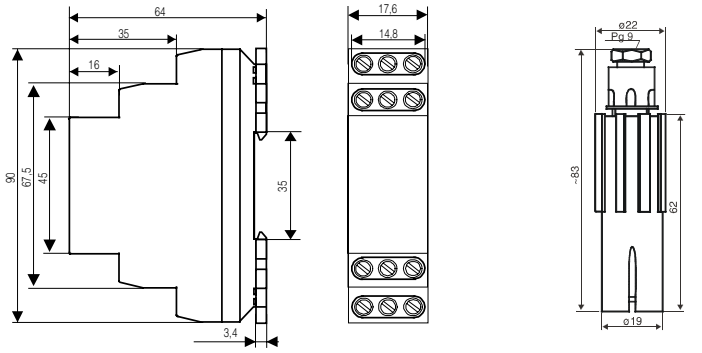

KRK-512-□ switching unit **KSK-201 cable probe**

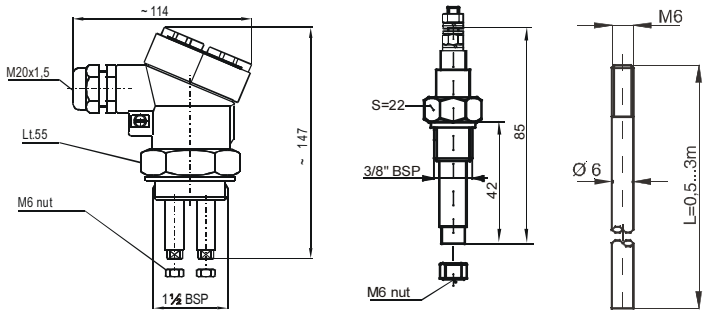

Probe socket KSH-20□ **Probe socket KSP-201 KSS-201 KSN-201** **Probe KLN-2□□**

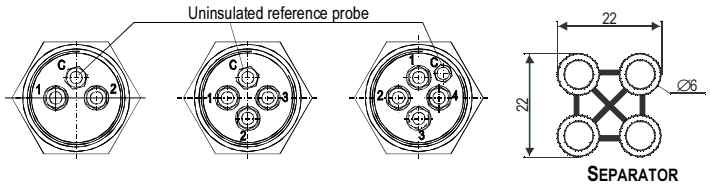

KSH-202 **KSH-203** **KSH-204** **Separator KLP-204**

3. INSTALLATION

KRK-512-□ switching unit can be mounted on DIN EN 60715 rail.

It is recommended that the **KLN-2□□** type probes are cut to the length required for level detection on site. The probes should be screwed into the **KS□-20□** type sockets.

Always remember to tighten the probe with an M6 nut!

When using **KSH-204** type probe sockets the reference probes should be tightened with special SW hexagonal M6 nuts!

It is suggested that **KLP-204** type PVDF separators (suitable up to 130°C) be used at every 0.5m for multiple probe devices to keep the probes apart.

A **KSK-201** single probe, attached to an insulated cable, can be lowered into pits and wells without running the risk of a short circuit. When a measurement is needed in a well or in a plastic pipe 2 of them have to be used.

4. ELECTRICAL CONNECTION

If the wall of the tank is conductive no reference probe is needed. In this case terminal **C** is to be connected to the tank. On multiple probe units E1 and E2 are marked with 1…4, the reference probe is marked with C. Admissible length of cable between signal processor and probes depends on cable capacity and conductivity. To eliminate signal interference it is recommended to use shielded cable when wiring probes.

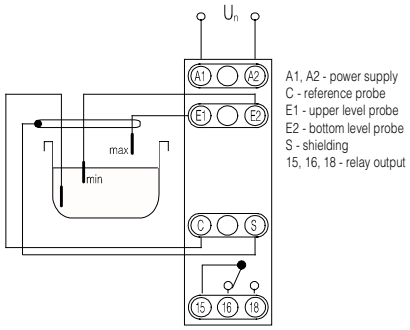

Connections for NIVOCONT KRK-512-1

5. PUTTING INTO OPERATION

5.1. ADJUSTMENT

The green LED (**U_n**) shows that the unit is on, and the energised state of the relay is indicated by the red LED. Operating mode and delay time (ON and OFF) can be set with the rotary selector switch and potentiometer on the front panel.
To set the sensitivity using SENS potentiometer do the following: submerge all probes into the fluid. Set a minimal delay time (t). Adjust the sensitivity from min. to max. value until the relay became energised. Now set the sensitivity a little higher, but don't set a too high sensitivity than needed.

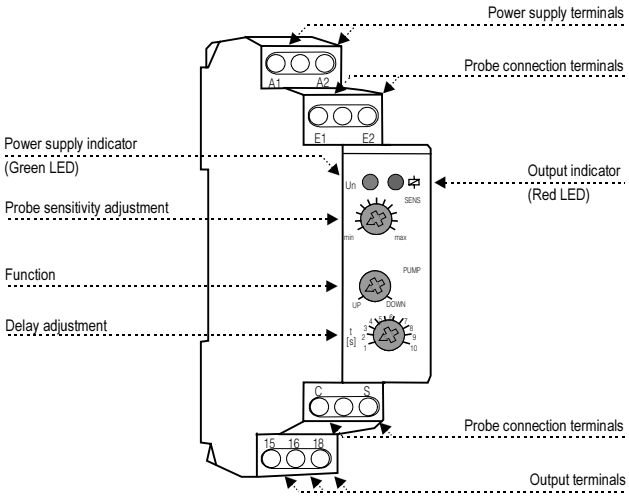

Front panel of NIVOCONT KRK-512

5.2. LED INDICATION

Green LED is on	- power supply is on
Red LED is on	- relay is switched on (contacts 15 and 18 are closed)
Red LED is off	- relay is disconnected (contacts 15 and 16 are closed)

5.3. SINGLE-LEVEL MONITORING LIMIT SWITCHING

If **KRK-512-☐** is monitoring only one level, the sensor probe should be connected to both E1 and E2 terminals. For High Fail-safe mode indication the 'PUMP' switch should be in 'UP' position and for Low level alarm indication in 'DOWN' position. Level alarm conditions are indicated in the same way (by de-energised relay state) as when a power cut-off occurs.

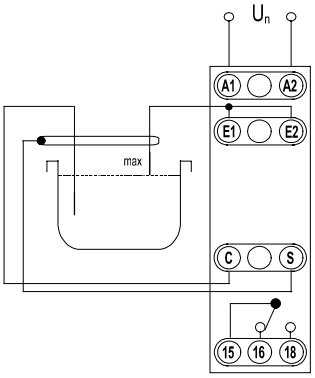

5.4. LEVEL CONTROL

NIVOCONT KRK-512-☐ can be used for control of filling or emptying.
During filling control the 'PUMP' switch should be in position 'UP' and during emptying control in position 'DOWN'. That way in case a power supply outage occurs (energised relay) overfilling or unwanted emptying is prevented.

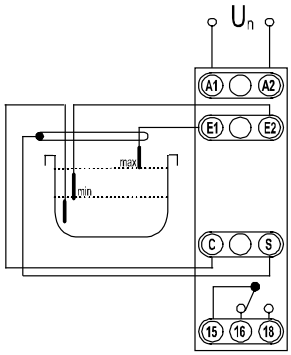

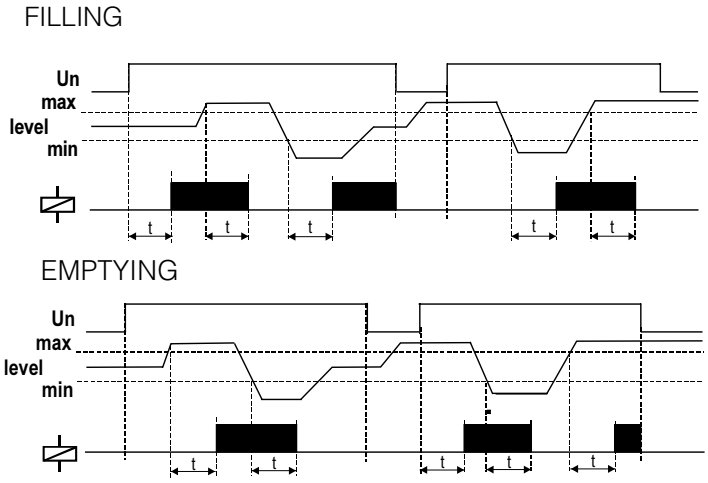

6. MAINTENANCE, REPAIR

The device does not require regular maintenance.
Repair within and beyond the warranty period is carried out at the Manufacturer's location.

7. STORAGE

Ambient temperature: -25 °C... +70 °C. Relative humidity: max. 85%

8. WARRANTY

All Nivelco products are warranted free of defects in materials or workmanship for a period of two years from the date of purchase, as indicated in the Certificate of Warranty.

krk5121a0600h_01
Aug. 2006.
Nivelco reserves the right to change technical data without notice!