Thank you for choosing a NIVELCO instrument.
We are sure that you will be satisfied throughout its use!

1. APPLICATION

The conductive measuring principle can be applied to liquids with specific conductivity over 10 µS/cm. The switching unit can sense the resistance between probes. Conductivity measurement is suitable only for detecting the presence of liquid at a given level of the tank. This level is represented by the length of the probe.

The level switch consists of a **NIVOCONT KRK-522-□** type switching unit and the **KLN-2□□** type probes selected according to the task. Probes are to be connected to the **NIVOCONT KS□-20** type probe socket head that can be screwed into the tank. If the material of the tank or its internal insulation is not conductive then a reference probe should be used in addition to the one, two, three or four probe(s), if the material of the tank is conductive, the tank can be used as a reference probe.

The conductive switch is suitable for filling-emptying control with 2 relay outputs working simultaneously or for level detection of 2 independent levels (in 1 or 2 tanks) with 2 independent relay outputs.

2. TECHNICAL DATA

2.1 General data

2.1.1 Technical data of the switching unit

Type	KRK-522-□	
Probe voltage	5 V AC	
Probe current	< 1 mA AC	
Sensitivity	Adjustable: 5 kΩ ... 100 kΩ	
Max. cable capacity	4 nF	
Response	max. 400 ms	
Setting accuracy (mech.)	± 5 %	
ON / OFF switching delay	Adjustable: 0.5 ... 10 s	
Relay output	2x SPDT	
Switching voltage	250 V AC1, 24 V DC	
Switching current	16 A AC1	
Switching power	4000 VA AC1, 384 W DC	
Electrical strength	4 kV	
Mechanical life-span	3 x10^7 switches	
Electrical life-span	0.7x10^5 switches	
Power supply U_n	110, 230 V AC	24 V AC/DC
Voltage range allowed	nominal voltage - 15% ... +10%	
Power consumption	max 4.5 VA	
Ambient temperature	-20 °C ... +55 °C	
Electrical connection	max. 2.5 mm² / with insulation 1.5 mm²	
Electrical protection	class II	class III
Ingress protection	IP 20	
Mechanical connection	DIN EN 60715 rail	
Mass	240 g	

2.1.2 Technical data of probe sockets

Type	KSK-201	KSP-201	KSS-201	KSN-201	KSH-202	KSH-203	KSH-204	KLN-2□□
Nr. of probes	1				2 probes + 1 ref. probe	3 probes + 1 ref. probe	4 probes + 1 ref. probe	1
Insulation of socket	ABS	PP	PFA					—
Cable gland	Pg 9	M4 nut rubber cap protected			M20x1.5 cable diameter 6 ... 12 mm			—
Process connection	—	3/8" BSP			1½" BSP			M6
Socket material	—	PP	A44 steel	KO35 stainless steel (1.4571)				
Housing material	—				Paint coated aluminium cast			—
Medium temperature	max 80°C		max 200 °C					—
Max. pressure	—	0.3 MPa	1.6 MPa					—
Ingress protection	—	IP 20			IP 65			—
Mass	0.05 kg	0.1 kg			0.4 kg			0.22 kg/m

2.2 Order codes

NIVOCONT K R K - 5 2 2 - □

Power supply	Code
230V AC	1
110V AC	2
24V AC/DC	4

NIVOCONT K S □ - 2 0 □

Type	Code
Cable probe	K
Single probe, PP socket	P
Single probe, steel socket	S
Single probe, st. steel socket	N
Multiple probes, st. steel socket	H

Probes	Code
1 no	1
2 nos + reference probe	2
3 nos + reference probe	3
4 nos + reference probe	4

NIVOCONT K L N - 2 □ □

Probe length*	Code
0.5m … 3m	05…30

* to be ordered in 0.5 m units

NIVOCONT K L P - 2 0 4 Probe separator

2.3 Accessories

- User's manual
- Certificate of warranty
- Declaration of conformity
- Sealing (2 mm thick) (KLINGER OILIT):
  - 1 pc. 3/8" *(for KSP-201, KSS -201, KSN-201)*
  - 1 pc. 1½" for a *KSH-20_*
- M6 nut (standard SW):
  - 3 pcs. for *KSH-202*
  - 4 pcs. for *KSH-203, KSH-204*
- M6 nut (non-st. SW): 1pc. for *KSH-204*

NIVOCONT
KRK-522 CONDUCTIVE LEVEL SWITCH

USER'S MANUAL

Manufacturer:
NIVELCO Process Control Co.
1043 Budapest, Dugonics u. 11.
Phone: (36-1) 889-0100 Fax: (36-1) 889-0200
e-mail: marketing@nivelco.com http://nivelco.com

2.4 Dimensions

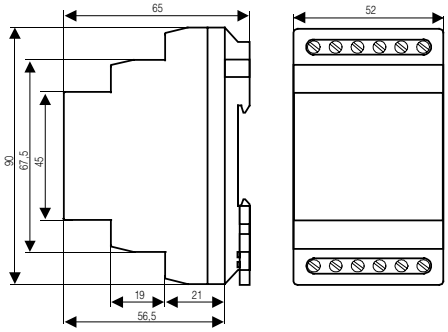

KRK-522-□ switching unit

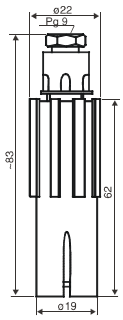

KSK-201 cable probe

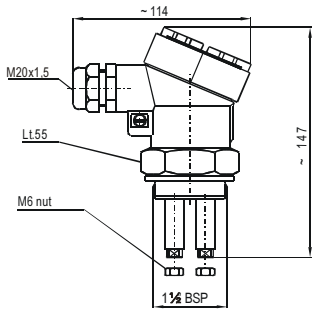

Probe socket KSH-20□

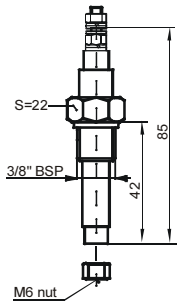

Probe socket KSP-201 KSS-201 KSN-201

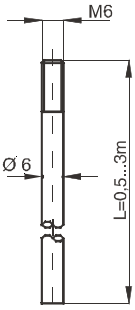

Probe KLN-2□□

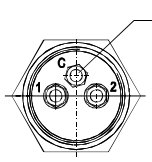

KSH-202

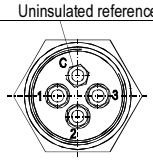

KSH-203

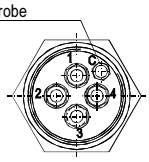

KSH-204

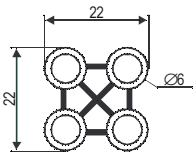

Separator KLP-204

3. INSTALLATION

KRK-522-□ switching unit can be mounted on DIN EN 60715 rail.

It is recommended that the **KLN-2□□** type probes are cut to the length required for level detection on site. The probes should be screwed into the **KS□-20□** type sockets.

Always remember to tighten the probe with an M6 nut!

When using **KSH-204** type probe sockets the reference probes should be tightened with special SW hexagonal M6 nuts!

It is suggested that **KLP-204** type PVDF separators (suitable up to 130°C) be used at every 0.5m for multiple probe devices to keep the probes apart.

A **KSK-201** single probe, attached to an insulated cable, can be lowered into pits and wells without running the risk of a short circuit. When a measurement is needed in a well or in a plastic pipe 2 of them have to be used.

4. ELECTRICAL CONNECTION

If the wall of the tank is conductive no reference probe is needed. In this case terminal **C** is to be connected to the tank.
On multiple probe units E1 and E2 are marked with 1...4, the reference probe is marked with C. Admissible length of cable between switching unit and probes depends on cable capacitance and conductivity. To eliminate signal interference it is recommended to use shielded cable when wiring probes.

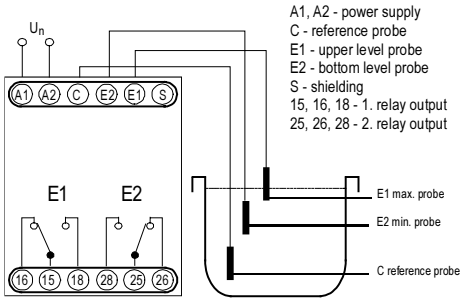

5. PUTTING INTO OPERATION

5.1. ADJUSTMENT

The green LED (**Un**) shows that the unit is on, the energised state of the relays are indicated by the E1 respectively E2 LEDs. Operating mode, delay ON and delay OFF can be set with the DIP switch on the front panel. tE1(s) and tE2(s) potentiometers are for adjusting the delay time. The sensitivity setting (R potentiometer) should comply with the conductivity of the fluid. Do not set sensitivity higher than required because the vapour precipitation may lead to operation disturbance.

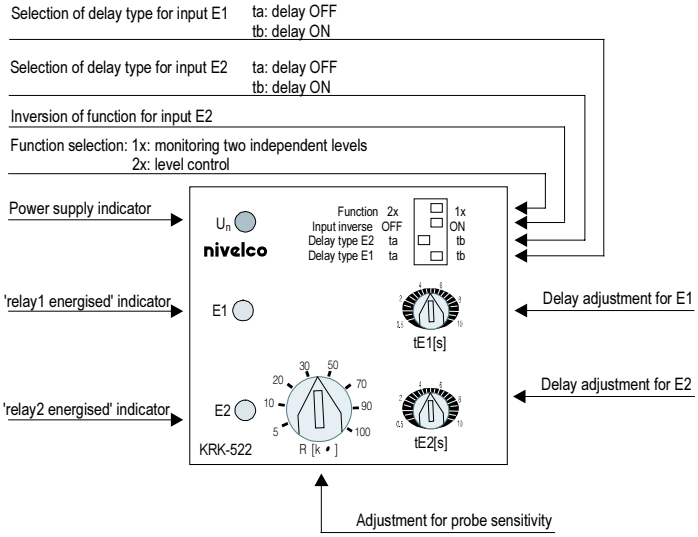

Front panel of NIVOCONT KRK-522

5.2. STATE OF RELAYS

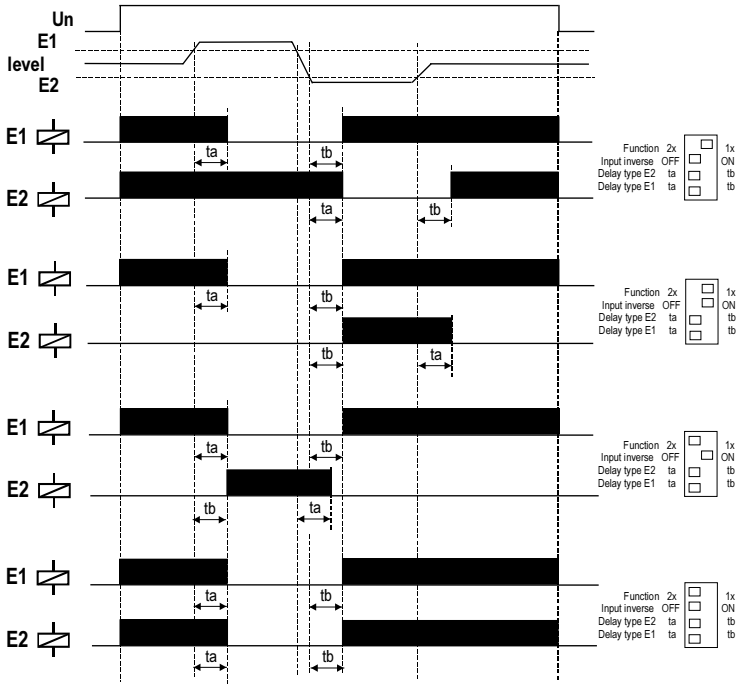

5.3. LEVEL DETECTION (FUNCTION: 1X)

KRK-522-□ allows level detection of 2 independent levels even in one tank or in two separated tanks.

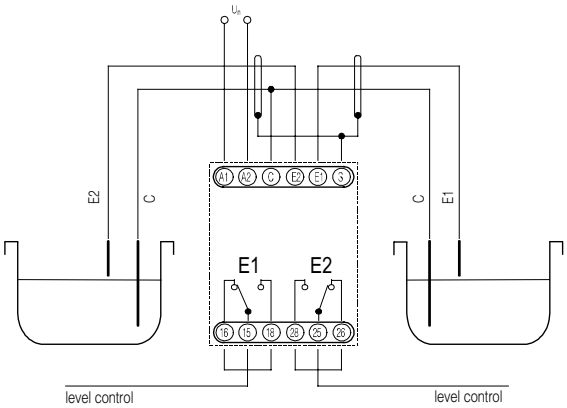

5.4. LEVEL CONTROL (FUNCTION: 2X)

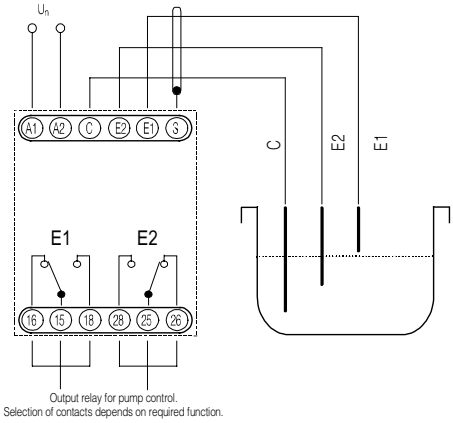

6. MAINTENANCE, REPAIR

The device does not require regular maintenance.
Repair within and beyond the warranty period is carried out at the Manufacturer's location.

7. STORAGE

Ambient temperature: -30 °C... +70 °C. Relative humidity: max. 85%

8. WARRANTY

All Nivelco products are warranted free of defects in materials or workmanship for a period of two years from the date of purchase, as indicated in the Certificate of Warranty.

krk5221a0600h_01
Aug. 2006.

Nivelco reserves the right to change technical data without notice!